- DESCRIPTION -

MORE...

Feature: PLJ-6LED-A is a cost-effective six digit LED frequency display module designed specifically for forum HAM friends. It is mainly used for displaying frequency values of devices such as transceivers and can also be used for conventional frequency measurement. This module has the characteristics of small and exquisite size, reliable performance, good visual effects, and low cost. Technical parameters: Gate time: 0.1 seconds Input impedance: high impedance Measurement range: 0.1 MHz~65 MHz Measurement accuracy: 10 Hz Sensitivity: better than 60mVpp Independent dual intermediate frequency design, with a minimum intermediate frequency adjustment step of 100Hz and an intermediate frequency range of 0~99.9999 MHz. It can be set to add or subtract intermediate frequency modes. Adopting 5032 package 13.000MHz temperature compensated voltage controlled crystal oscillator (VC-TCXO) with frequency stability of □ 2.5ppm. DC input: DC8V~15V (with power polarity reverse protection) or DC5V (hardware settings required). Working current: maximum 90mA Six common anode LED display, displaying up to six digits. The brightness of the eight level LED can be adjusted, and the factory setting is the highest brightness. Dimensions: Length x Width x Height: 91mm x 28mm x 20mm Onboard interface RF IN (signal input): HX2.54-2P socket ICSP (Programming Interface): 2.54-6P pins DC IN (power interface): HX2.54-2P socket Package included: 1x LED Digital Display 6-Digit 0.1MHz-65MHz Digital RF Frequency Meter Counter Tester Cymometer Red/Blue/Green DC 8V-15V

- PICTURE -

MORE...




7.050.0



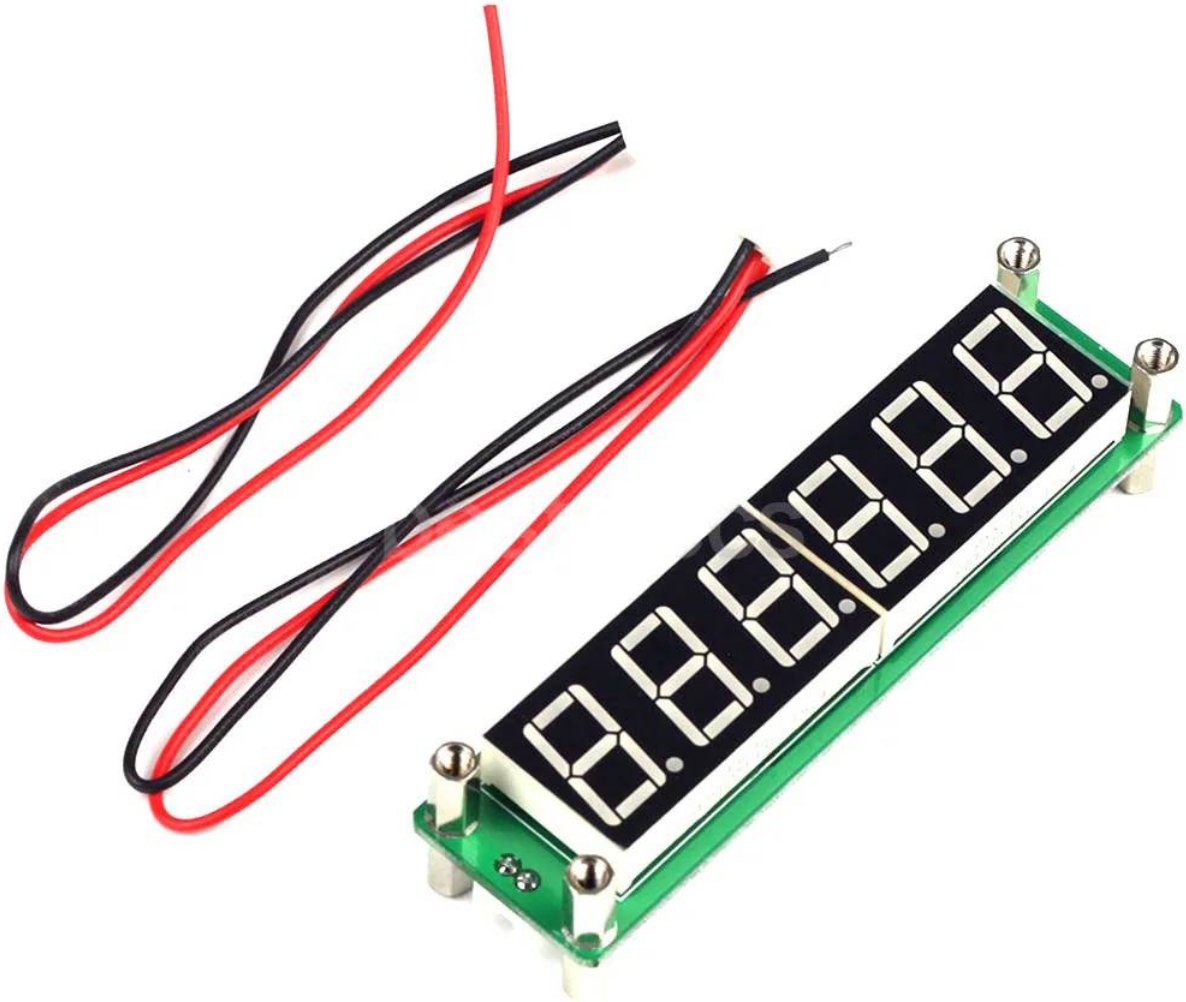



PCB Positive(3D View)

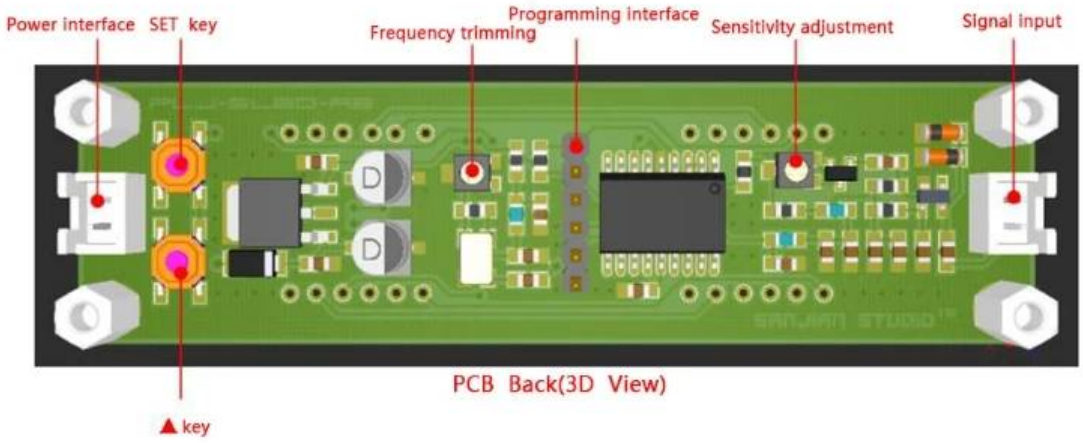

PCB Back(3D View)

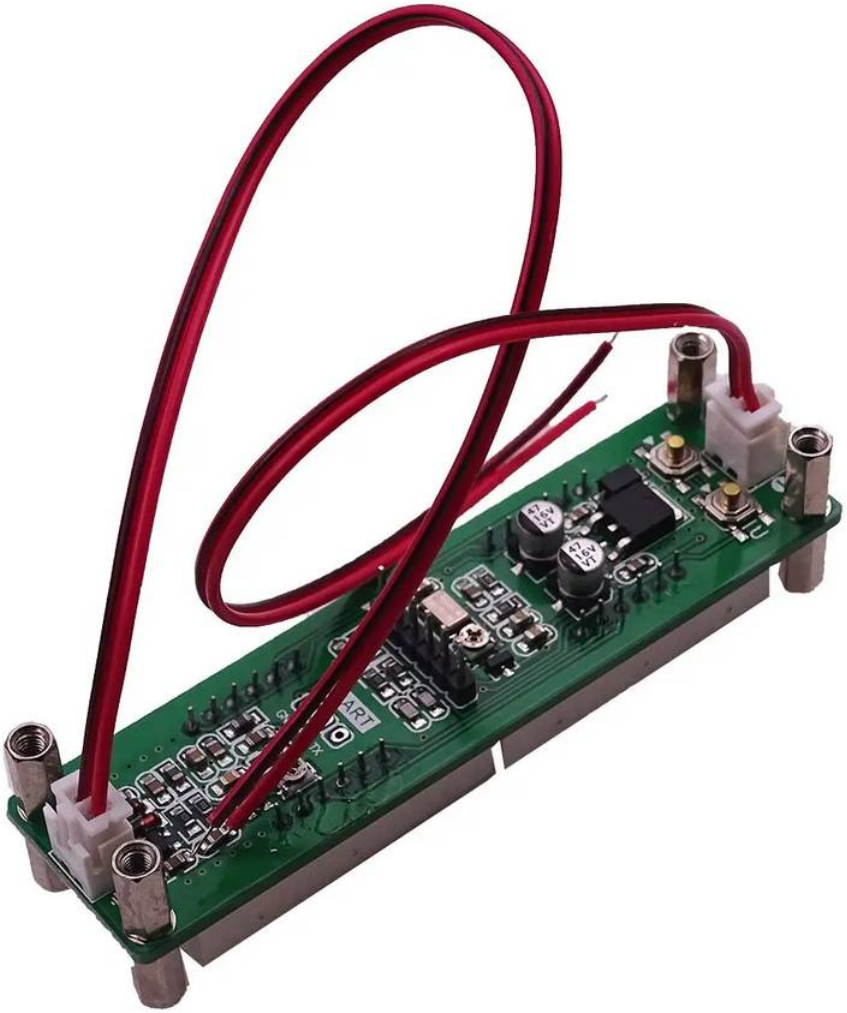

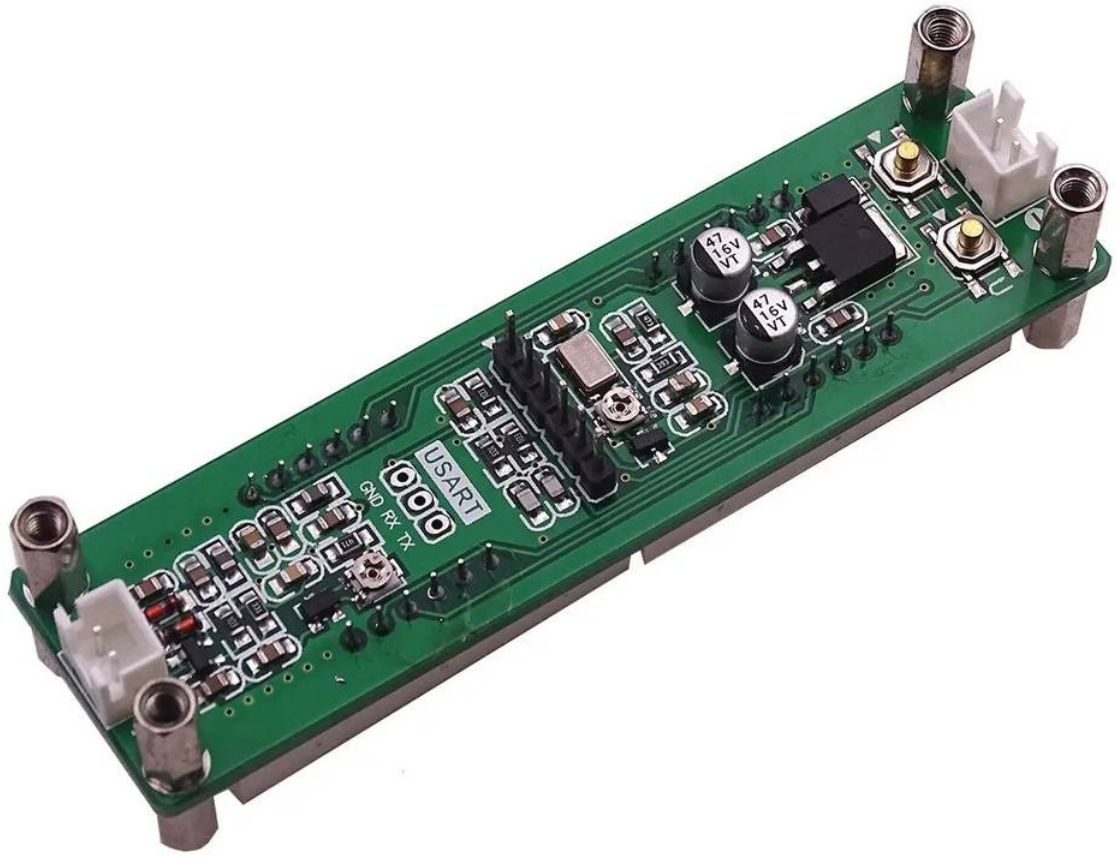
47
16V
VT
47
16V
VT
USART
GND RX TX

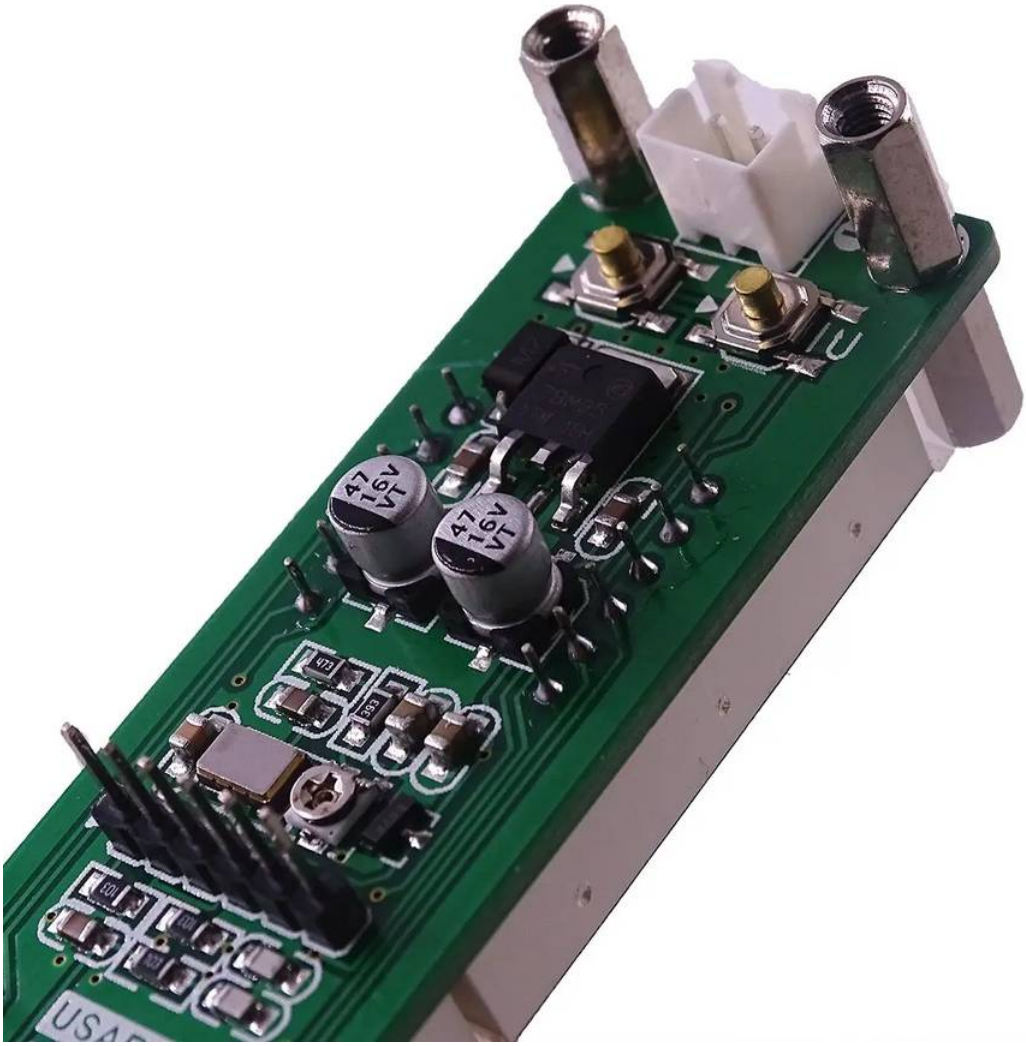
47
16V
VT
47
16V
VT